Terminal and Connector Inspection

1. Many malfunctions in the electrical system are caused by poor harness and terminals. Faults can also be caused by interference from other electrical systems, and mechanical or chemical damage.
2. Thoroughly check shorting connectors for looseness, poor connection, bending, corrosion, contamination, deterioration, or damage.
3. Has a problem been found?

YES

a. Repair as necessary and then go to "Verification of Vehicle Repair" procedure.

NO

a. Go to "Main harness circuit inspection" procedure.

Main harness Circuit Inspection

1. Ignition "OFF".
2. Disconnect the battery (-) terminal cable from the battery, and wait at least one minutes.
3. Disconnect PFIS connector and SRSCM main harness connector.
4. Measure voltage between terminal "1" or "2" of the PFIS harness connector and chassis ground.

1) Specification : 0V

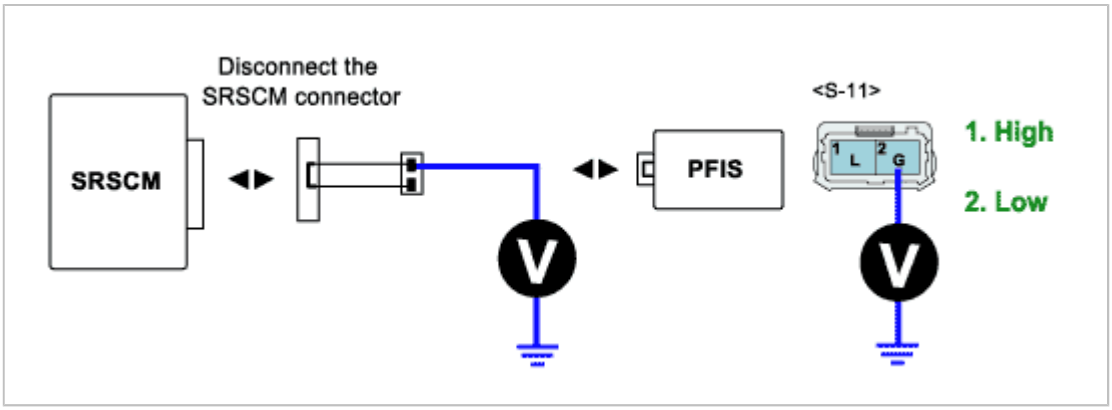

5. Is the measured Voltage within specifications?

YES

a. Go to "Component Inspection" procedure.

NO

a. Substitute the SRS main harness and check for proper operation.
If the problem is corrected, replace SRS main harness and then go to "Verification of Vehicle Repair" procedure.