COMPONENT LOCATION

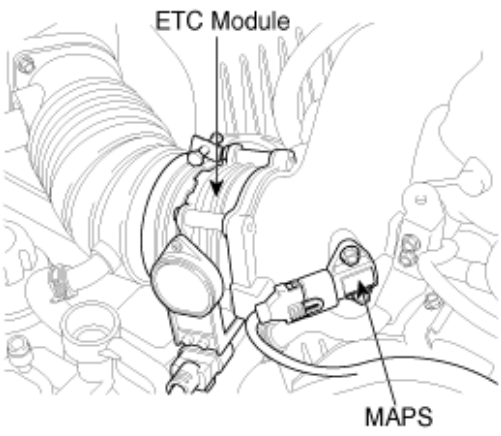

GENERAL DESCRIPTION

The Electronic Throttle Control(ETC) system is made of the components throttle body, Throttle Position Sensor(TPS)1&2 and Accelerator Position Sensor(APS) 1&2. TPS1&2 are sharing the same source voltage and ground.The throttle valve opening is control by throttle motor which is controlled by Engine Control Module(ECM).The opposite position indicator shows inverted signal characteristics.TPS1 output voltage increases smoothly in proportion with the throttle valve opening angle after starting. TPS2 output voltage decreases in inverse proportion with the throttle valve opening angle after starting. TPS provides feedback to the ECM to control the throttle motor in order to control the throttle valve opening angle properly in response to the driving condition.

DTC DESCRIPTION

Checking output signals from TPS2 every 8.5 sec. under detecting condition, if an output signal is above 4.75V for more than 0.1 sec., ECM sets P0223. MIL(Malfunction Indication Lamp) turns on when the malfunction lasts till consecutive 2 driving cycle.

DTC DETECTING CONDITION

Item	Detecting Condition	Possible Cause
DTC Strategy	• Signal High	• Poor connection • Short to battery in signal harness • Open in ground harness • TPS • ECM
Enable condition	• IG "ON"	
threshold value	• The signal voltage of TPS 〉4.75V	
diagnosis time	• Continuous (more than 0.1 sec. failure for every 8.5 sec.test)	
MIL ON condition	• 2 driving cycles	

SIGNAL WAVEFORM AND DATA

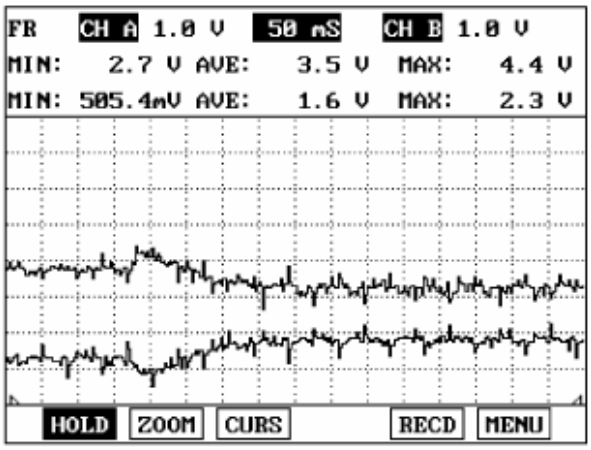

Hit the accelerator at IG ON

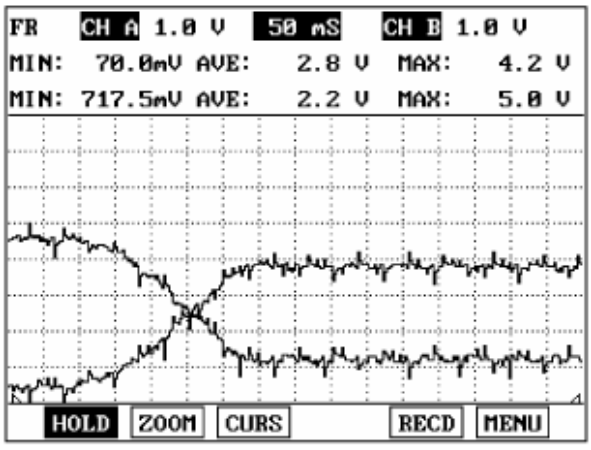

Open the throttle valve by force at IG ON

SPECIFICATION

Throttle opening (°)	Output voltage(V) [Vref=5.0]	
	TPS1	TPS2
0°	0.0V	5.0V
10°	0.5V	4.5V
20°	0.9V	4.1V
30°	1.4V	3.6V
40°	1.8V	3.2V
50°	2.3V	2.7V
60°	2.7V	2.3V
70°	3.2V	1.8V
80°	3.6V	1.4V
90°	4.1V	0.9V
100°	4.5V	0.5V
110°	5.0V	0.0V

SCHEMATIC DIAGRAM

[CIRCUIT DIAGRAM]

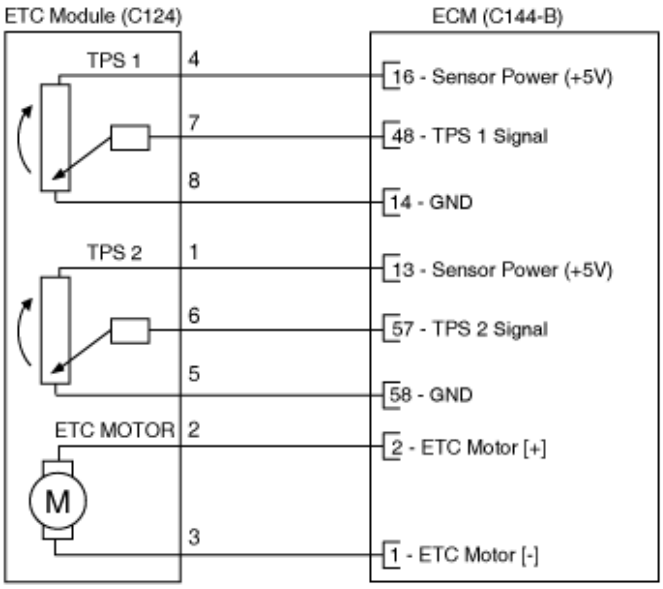

[CONNECTION INFORMATION]

Terminal	Connected to	Funtion
1	ECM C144-B (13)	TPS 2 Sensor Power (+5V)
2	ECM C144-B (2)	ETC Motor [+] Control
3	ECM C144-B (1)	ETC Motor [-] Control
4	ECM C144-B (16)	TPS 1 Sensor Power (+5V)
5	ECM C144-B (58)	TPS 2 Ground
6	ECM C144-B (57)	TPS 2 Signal
7	ECM C144-B (48)	TPS 1 Signal
8	ECM C144-B (14)	TPS 1 Ground

[HARNESS CONNECTORS]



C124

ETC MODULE

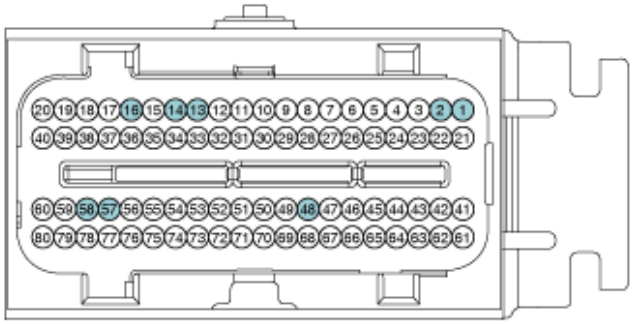

C144-B

ECM

MONITOR DTC STATUS

1. Check DTC Status
   (1) Connect scantool to Data Link Connector(DLC).
   (2) IG "ON".
   (3) Select "Diagnostic Trouble Codes(DTCs)" mode, and then Press F4(DTAL) to check DTC's information from the DTCs menu.
   (4) Read "DTC Status" parameter.

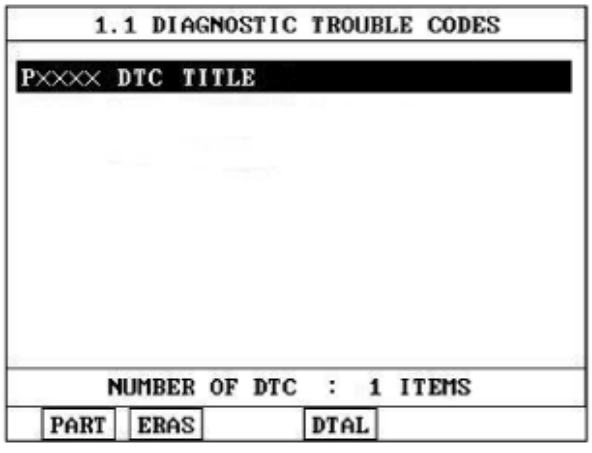

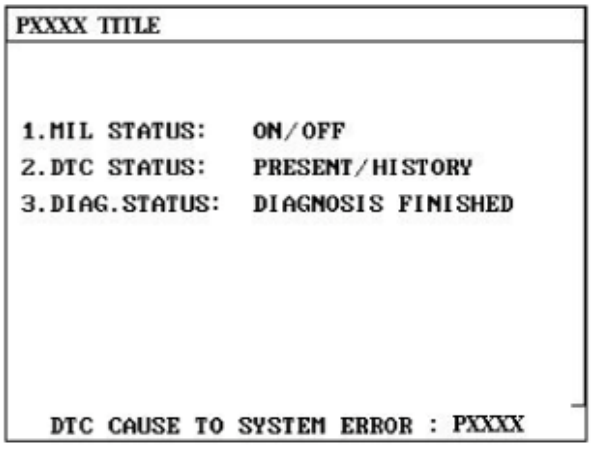

(5) Is parameter displayed "Present fault"?

YES

▸ Go to "Terminal and connector inspection" procedure.

NO

▸ Fault is intermittent caused by poor contact in the sensor's and/or ECM's connector or was repaired and ECM memory was not cleared. Thoroughly check connectors for looseness, poor connection, ending, corrosion, contamination, deterioration, or damage. Repair or replace as necessary and go to "Verification of Vehicle Repair" procedure.

TERMINAL AND CONNECTOR INSPECTION

1. Many malfunctions in the electrical system are caused by poor harness and terminals. Faults can also be caused by interference from other electrical systems, and mechanical or chemical damage.
2. Thoroughly check connectors for looseness, poor connection, bending, corrosion, contamination, deterioration, or damage.
3. Has a problem been found?

YES

▸ Repair as necessary and go to "Verification of Vehicle Repair" procedure

NO

▸ Go to "Signal Circuit Inspection" procedure.

SIGNAL CIRCUIT INSPECTION

1. Check voltage
   (1) IG "OFF" and disconnect TPS connector.
   (2) IG "ON and ENG "OFF"
   (3) Measure voltage between terminal 6 of TPS harness connector and chassis ground.

Specification : Approx. 0V

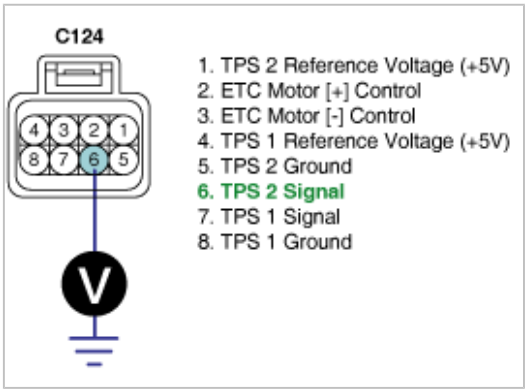

   (4) Is the measured voltage within specification?

YES

▸ Go to "Ground Circuit Inspection" procedure.

NO

▸ Go to "Check short to battery in harness" as follows.

2. Check short to battery in harness
   (1) IG "OFF" and disconnect TPS connector and ECM connector.
   (2) Measure resistance between terminals 1 and 6 of TPS harness connector.
   (3) Measure resistance between terminals 4 and 6 of TPS harness connector.
   (4) Measure resistance between terminals 2 and 6 of TPS harness connector.

(5) Measure resistance between terminals 3 and 6 of TPS harness connector.

Specification : Infinite

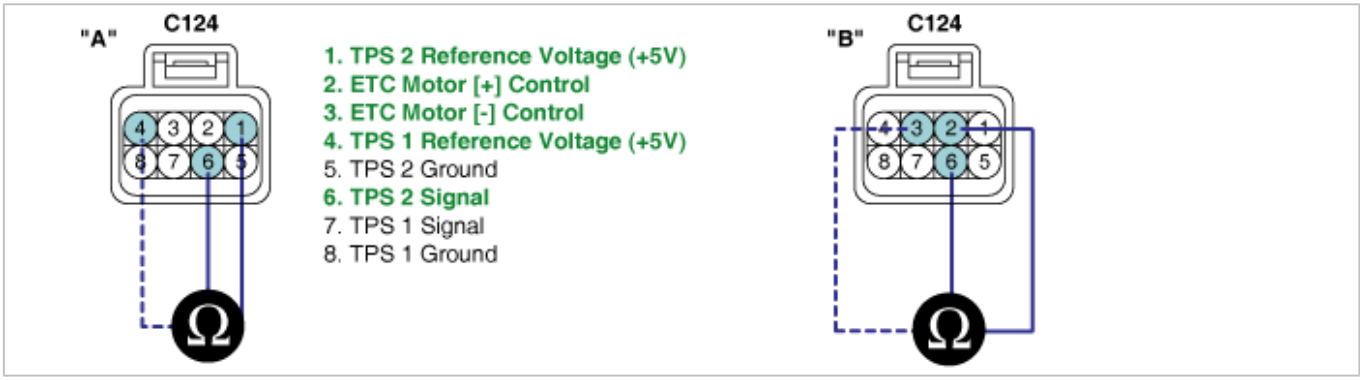

(6) Is the measured resistance within specification?

YES

- Go to " Ground Circuit Inspection" procedure.

NO

- Repair short to battery in harness, and go to "Verification of Vehicle Repair" procedure.

GROUND CIRCUIT INSPECTION

1. IG "OFF" and disconnect TPS connector.
2. IG "ON" and ENG "OFF"
3. Measure voltage between terminal 1 of TPS harness connector and chassis ground.
4. Measure voltage between terminals 1 and 5 of TPS harness connector.

Specification : Measurement "A" - Measurement 'B' = Approx. below 200mV

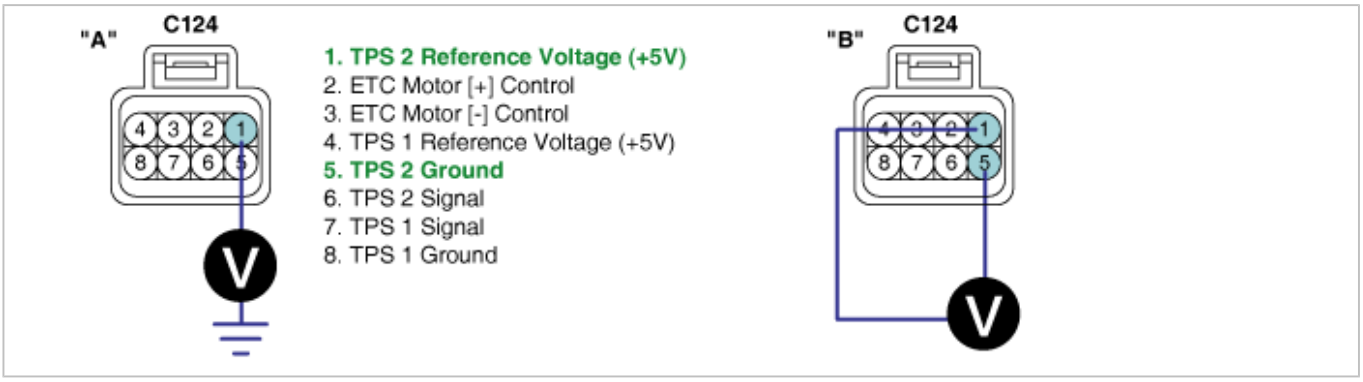

5. Is the measured voltage within specification?

YES

- Go to "Component Inspection" procedure.

NO

- Repair open or contact resistance inharness, and go to "Verification of Vehicle Repair: procedure.

COMPONENT INSPECTION

1. Check TPS
   (1) IG "OFF" and disconnect TPS connector.
   (2) Measure resistance between terminals 1 and 5 of TPS connector.(Component side)

Specification : 2.7 ~ 4.1kΩ

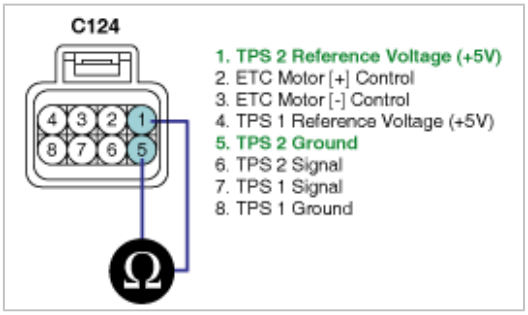

(3) Is the measured resistance within specification?

YES

▸ Substitute with a known - good ECM and check for proper operation. If the problem is corrected, replace ECM and go to "Verification of Vehicle Repair" procedure.

NO

▸ Substitute with a known - good TPS and check for proper operation. If the problem is corrected, replace TPS and go to "Verification of Vehicle Repair" procedure.

There is a memory reset function on scantool that can erase optional parts automatically detected and memorized by ECM. After testing ECM on the vehicle, use this function to reuse the ECM on the others

Procedure of ETS Initialization

1. Erase the trouble codes on ECM
2. Turn the ignition key off and keep this condition until the main relay is turned off.(It will takes 10sec.)
3. Turn ignition key on more than 1second to record the throttle motor position on the EEPROM

VERIFICATION OF VEHICLE REPAIR

After a repair, it is essential to verify that the fault has been corrected.

1. Connect scan tool and select "Diagnostic Trouble Codes(DTCs)" mode
2. Press F4(DTAL) and confirm that "DTC Readiness Flag" indicates "Complete". If not, drive the vehicle within conditions noted in the freeze frame data or enable conditions
3. Read "DTC Status" parameter
4. Is parameter displayed "History(Not Present) fault"?

YES

▸ System performing to specification at this time. Clear the DTC

NO

▸ Go to the applicable troubleshooting procedure.