CAUTION

Put on gloves to protect your hands.

CAUTION

- When prying with a flat-tip screwdriver, wrap it with protective tape, and apply protective tape around the related parts, to prevent damage.
- Use a plastic panel removal tool to remove interior trim pieces to protect from marring the surface.
- Take care not to bend or scratch the trim and panels.

1. Disconnect the negative (-) battery terminal.
2. Remove the center fascia panel (A).
   (Refer to Body - "Crash pad")

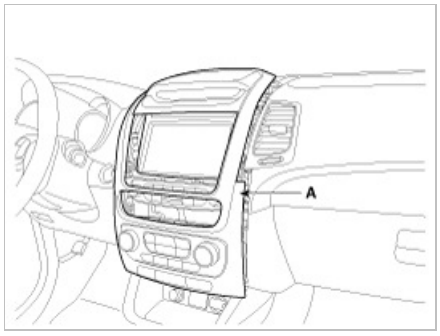

3. Disconnect the connectors and cables (A) from center fascia panel.

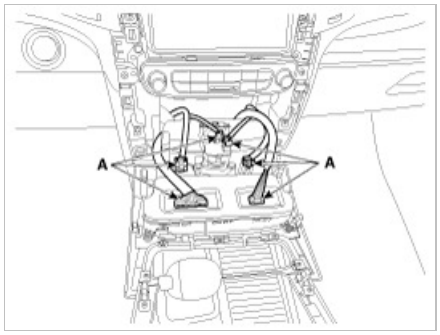

4. Remove the crash pad center air vent (A).

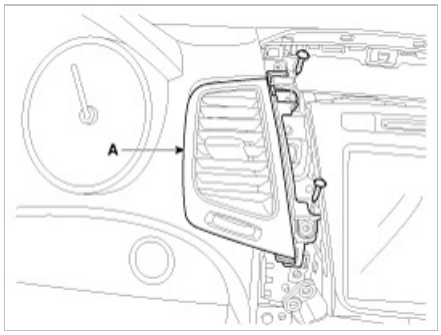

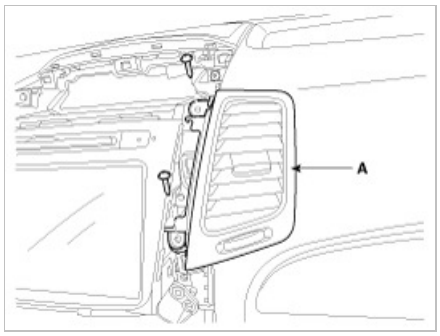

5. Remove the audio head unit (A) from crash pad after loosening the screws (4EA).

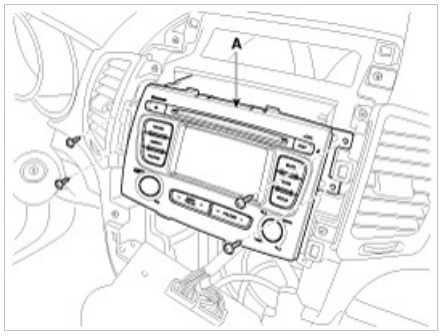

6. Disconnect the connectors and cables (A) from head unit.

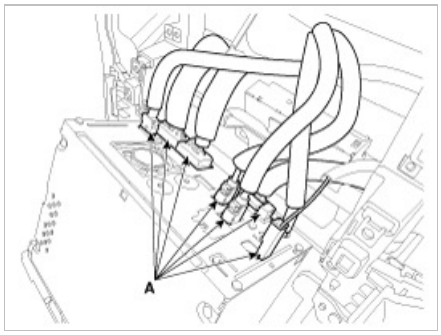

NOTE

When the compact disc is not ejected, do not remove it forcibly.

Installation

1. Connect the audio unit connectors and cable.
2. Install the audio unit.
3. Install the center facia panel.
4. Connect the negative (-) battery terminal.

NOTE

A. Make sure the connector are connected in properly.
B. Check the audio system.