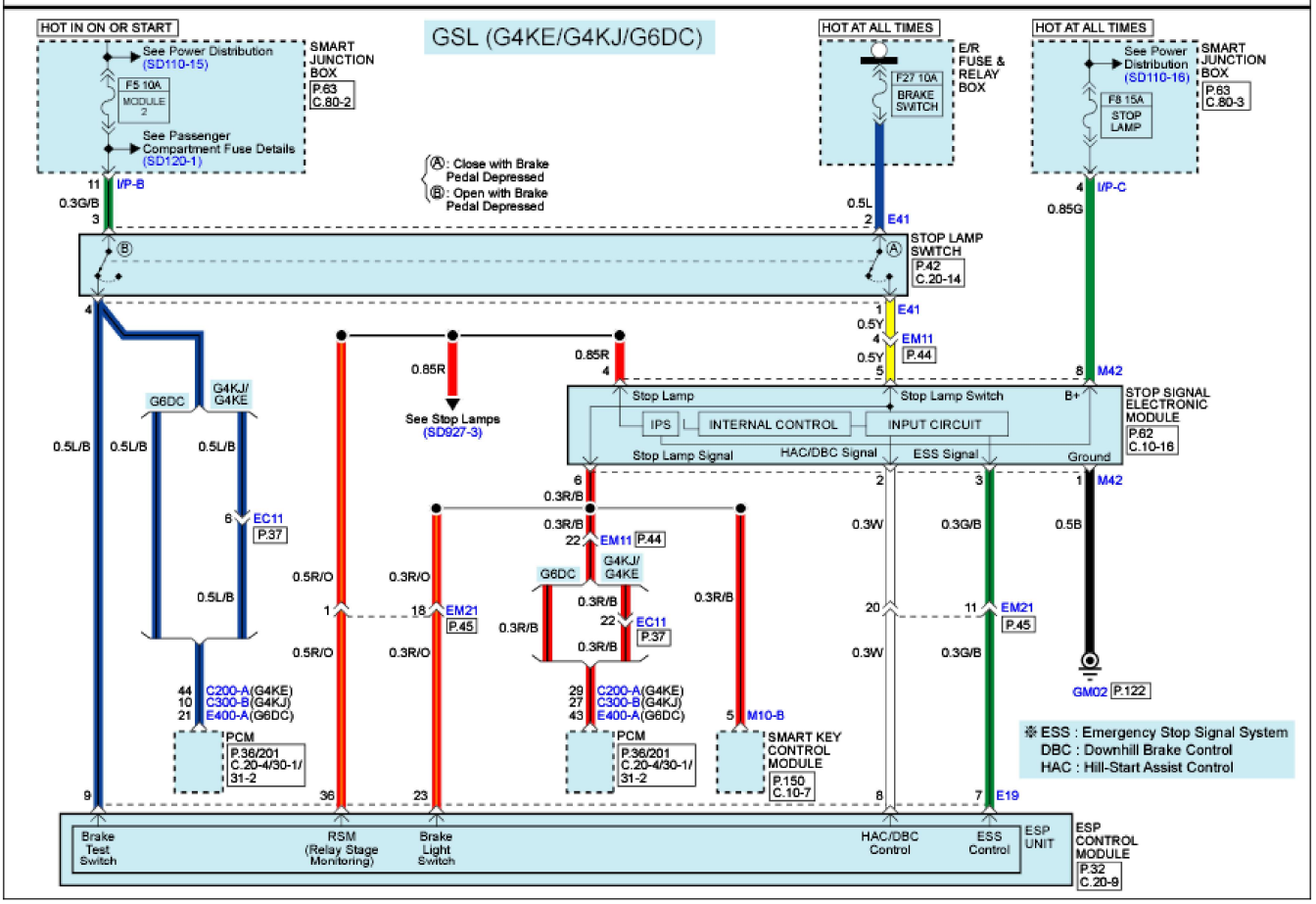Electronic Stability Program (ESP) System (3) SD588-3